New Scale Technologies

SMALL, PRECISE, SMART … IN MOTION

MPM

Multi-Probe Micromanipulator System

Maximize productivity and precision in acute in-vivo recording with silicon neural probes

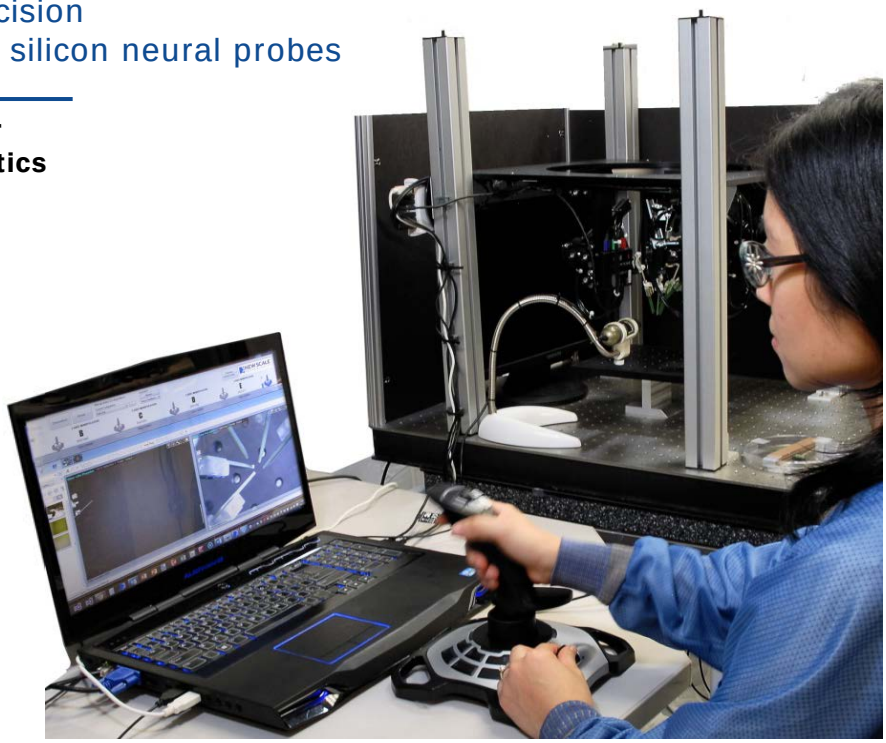

Automated probe positioning for electrophysiology and optogenetics

- Automatically position multiple probes from one PC
- Space-optimized for upright or inverted experiments
- Virtual coordinate software streamlines setup and simulation
- Accepts joystick or other input
- For Neuropixels, NeuroNexus, Cambridge Neurotech and more

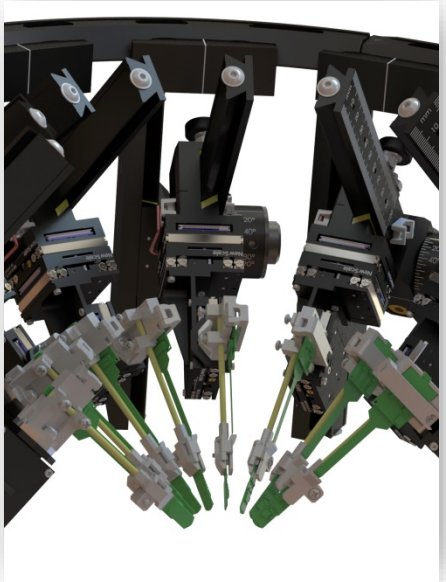

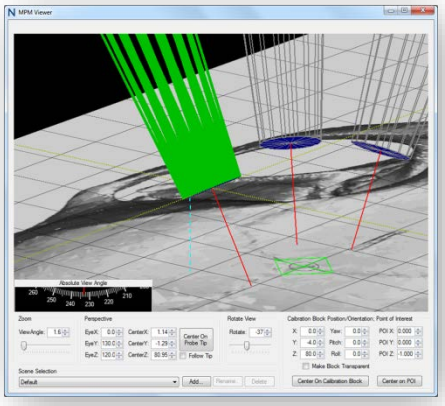

Created with Scientists, for Scientists

The Multi-Probe Micromanipulator (MPM) System provides convenient, automated positioning of multiple neural probes for acute in-vivo recording. Simple to set up and operate, it is the first micromanipulator **designed specifically for use with silicon probes.**

The compact design allows for independent positioning of multiple probes in the smallest space, with ample clear area for a virtual task environment. Automatically and independently move each probe to the optimum location in the brain.

Each probe arm has four degrees of freedom for pre-adjustment, and three axes of motorized motion with 15 mm of travel for fine positioning and insertion.

The new Virtual Coordinate System software automatically calculates the approach angle of each probe and moves probes independently using stereotactic coordinates. Use the powerful **simulation mode** to plan and visualize probe positions and approach angles, set insertion paths, and check for potential probe interference.

In addition to high-density silicon probes, the MPM System is compatible with tetrodes and other probes. It can be used to simultaneously position optical waveguides or optical fibers for research combining electrophysiology with optogenetic stimulation.

Rapid and Accurate Positioning of Multiple Neural Probes

A mounting ring allows multiple probe arm assemblies to be positioned around the target. The ring sections mount to standard laboratory tables (upright configuration) or the underside of an elevated platform (inverted configuration). The system design maximizes space for animal interaction with a virtual task environment.

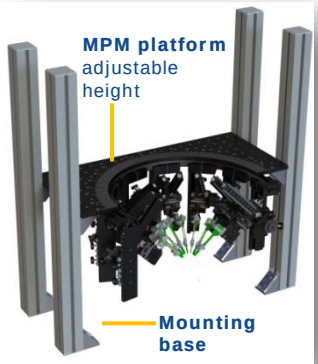

Inverted Configuration

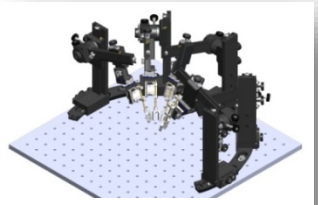

Upright Configuration

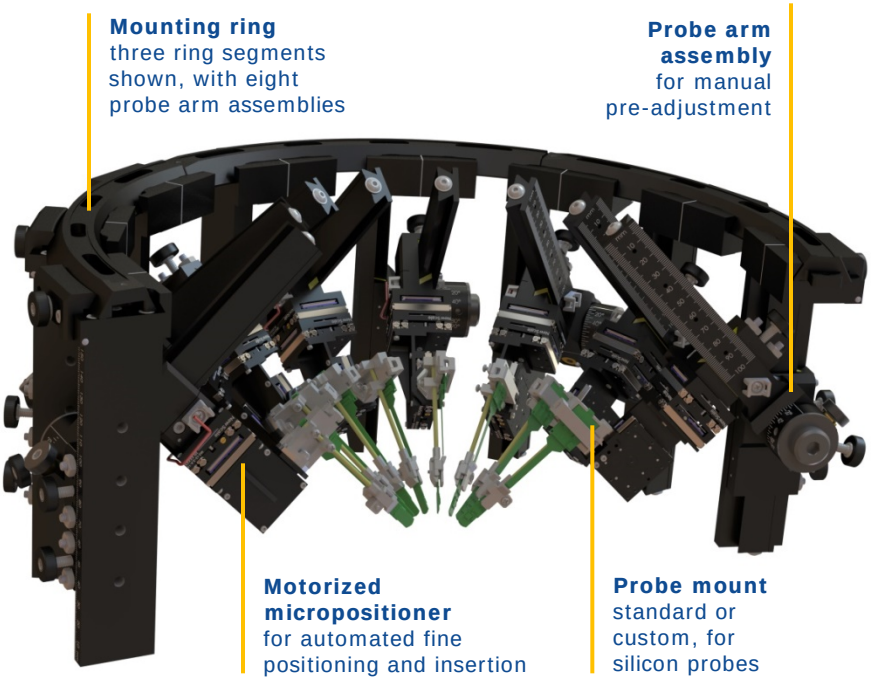

Intuitive PC Control Application

A single USB connects all manipulators to a PC. Control up to eight probes from one window using a joystick, mouse or other USB input device. Choose from coarse, fine and insertion step modes. The insertion mode provides very slow z-axis motion while disabling x and y motion.

The new **Virtual Coordinate System (VCS) software** lets you enter probe angle and displacement, and automatically register each probe to a 2D image or 3D reference space in stereotactic coordinates. Automatically calculate probe approach angles and move each probe independently within this global space. **You spend less time calculating angles, more time recording.**

Use the powerful simulation mode to plan and visualize probe positions and approach angles, and check for potential probe interference.

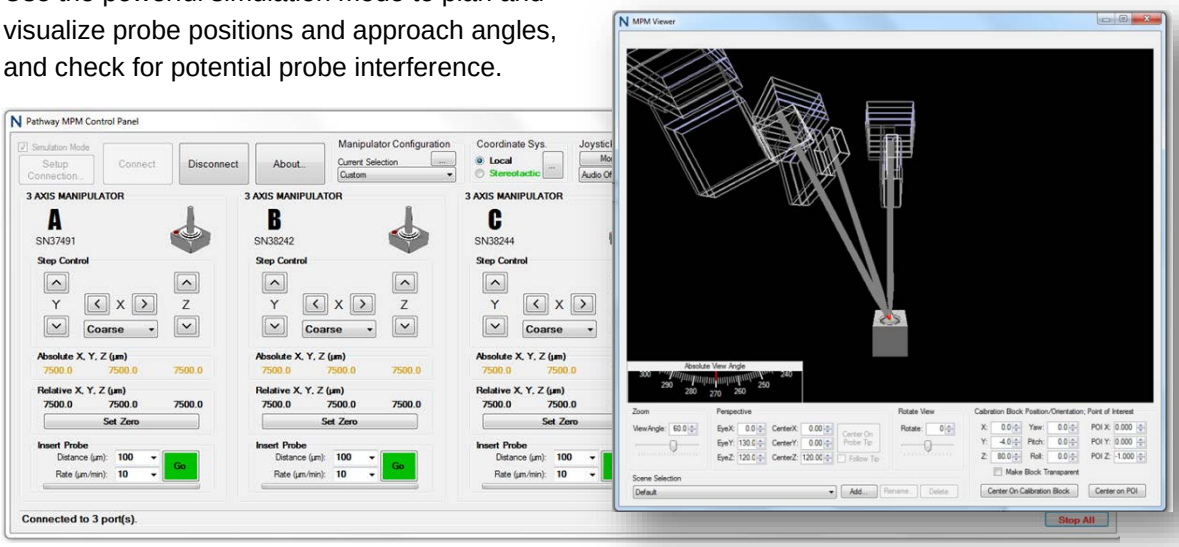

A single PC widow displays up to five probe controls at once (up to eight with horizontal scrolling). Open additional windows to control more than eight probes, on one or more rigs, using one PC.

4-DOF Manual Pre-Adjustment plus 3-Axis Motorized Positioning

Probe Arm Assembly for Manual Pre-Adjustment (MPM-4 DOF ARM)

The polar angle, arm length, arm height and arm angle are adjustable. Adjustable stops enable repeatable positioning. Displacement markings allow registration of each probe location in stereotaxic coordinates to simplify approach angle calculations.

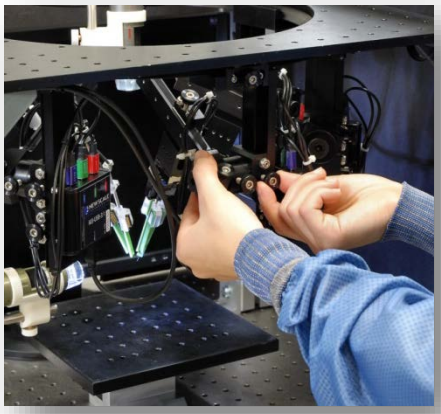

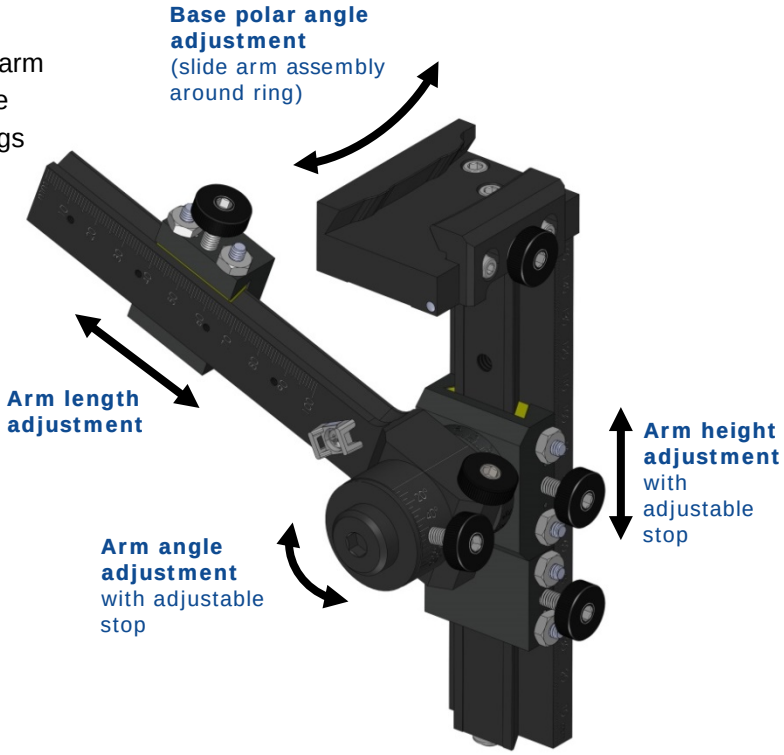

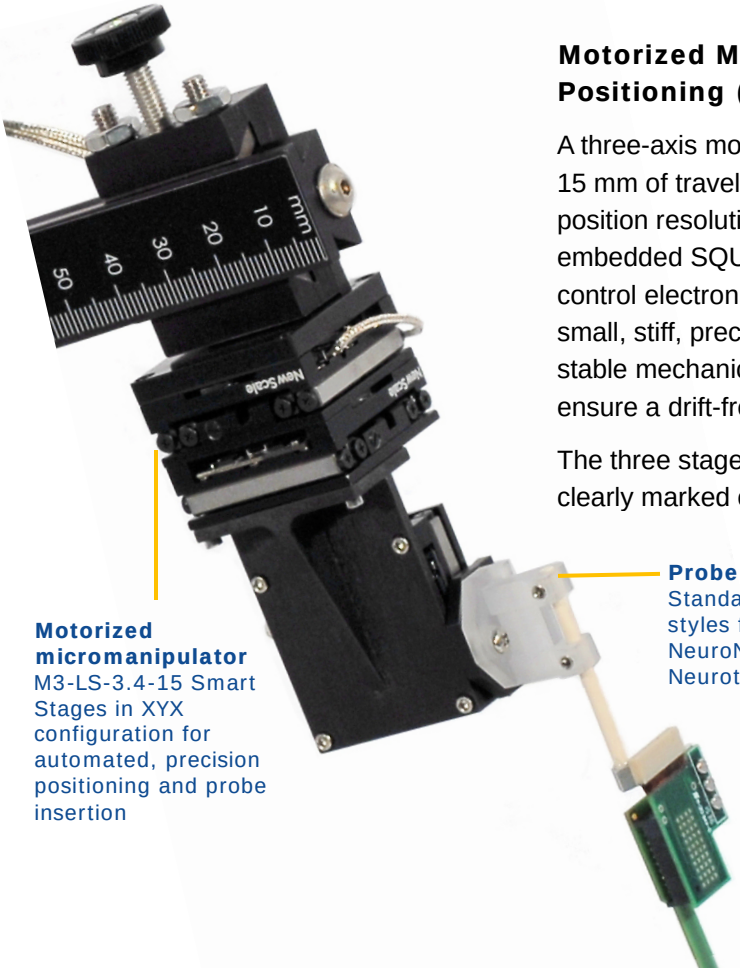

Motorized Micromanipulator for Automated Positioning (M3-LS-3.4-15-XYZ)

A three-axis motorized stage assembly on each arm provides 15 mm of travel along each axis with 0.5 micron closed-loop position resolution. New Scale's M3-LS Linear Smart Stages have embedded SQUIGGLE piezoelectric motors along with all drive and control electronics, eliminating the bulk of separate controllers. The small, stiff, precise mechanical stages, along with an exceedingly stable mechanical loop from the probe tip to the manipulator, ensure a drift-free manipulator environment.

The three stages on each arm connect to a 3:1 USB adapter using clearly marked connectors.

3:1 USB adapter

Fully Configurable, Fully Integrated

MPM Systems are fully configurable for number of probe arms, inverted or upright position, and type of probe holders.

Each system is complete and easy to assemble with the tools and hardware provided. All cables and connectors are labeled including standard USB cables to the PC. The MPM software installs on your Windows PC in minutes.

The innovative probe mounting and pre-positioning solution (see tech note) reduces setup time, minimizes risk of damage to silicon probes during setup, and maximizes data collection time.

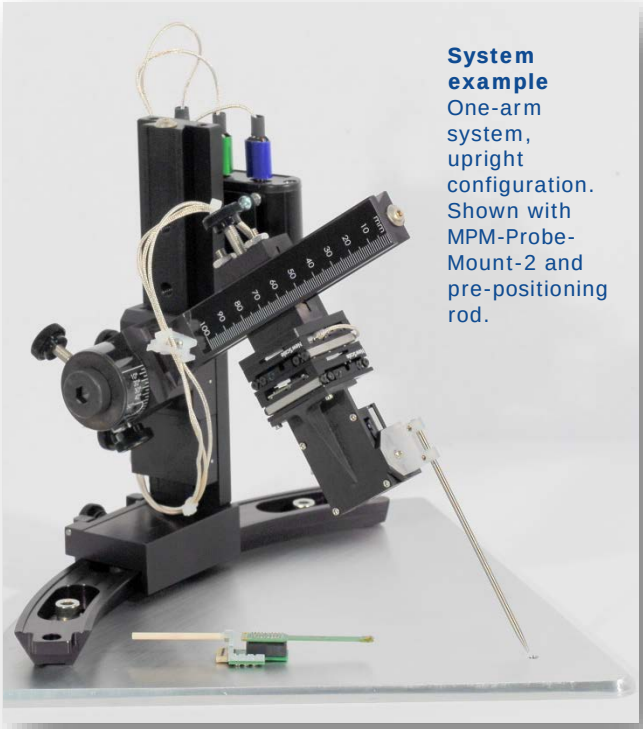

System example One-arm system, upright configuration. Shown with MPM-Probe-Mount-2 and pre-positioning rod.

Additional information

Visit the website for videos and more information, or call us to configure an integrated MPM system for your research lab.

Specifications for motorized stages

M3-LS-3.4-15-XYZ	
Travel Range (stroke)	15 mm each axis
Payload	100 grams (recommended) 200 grams (maximum)
Linear Slide Features	Crossed roller bearings with highest stiffness
Dimensions	**32 x 32 x 11 mm with embedded controller (each axis)**
Speed	**4 mm/s**
Resolution	**0.5 µm**
Bi-directional Repeatability	**< 5 µm**
Accuracy	**< 20 µm**

Ordering information

Components	Description
Items Needed for Each MPM System	
MPM-System Kit	**I**ncludes mechanical hardware, instructions, USB Hub, USB cables, and MPM Software with Virtual Coordinate System (VCS).
MPM-Ring-72-DEG	**Mounting Ring Section, 72° Arc** One per probe recommended. Order five for full 360° positioning flexibility.
MPM-Platform (Optional)	**Platform** for mounting MPM rings and manipulators in inverted configuration.
Items Needed for Each Probe	
MPM-4 DOF ARM-X	**MPM Four-DOF manual positioner** *Specify inverted or upright configuration X = UPRIGHT or X=INVERTED*
M3-LS-3.4-15-XYZ-MPM-X	**Three-axis motorized micro-manipulator. Includes:** (3) M3-LS-3.4-15 Linear Smart Stages assembled into XYZ configuration (1) M3-USB-3:1 Adapter *Specify inverted or upright configuration X = UPRIGHT or X=INVERTED*
MPM-Probe Mount-X (Optional)	**Mounting bracket and kit for specific probes - c**ontact us for standard and custom options.

New Scale Technologies

Call +1 585 924 4450
Email NSTsales@newscaletech.com
Visit www.newscaletech.com